GRANICKI, O.

Current status of the study on the viral etiology of coryza (acute rhinitis). Pol. tyg. lek. 19 no.21:801-804 18 My'64

1. Z Kliniki Chorob Zakaźnych Śl. Akademii Medycznej w Bytomiu; kierownik: prof. dr. med. Karol Szymański.

BILOWICKA, Maria; GRANICZNA, Lucja; SZELĘZYNSKI, Kazimierz

Evaluation of results of treatment of tuberculous cavities with intrabronchial instillations of antimicrobial drugs. Gruzlica 25 no.1:23-30 Jan 57.

1. Z Kliniki Ftyzjatrycznej Akademii Medycznej w Gdansku Kierownik: prof. dr. M. Telatycki. Adres: Gdansk, ul. Miszewskiego 18.

(TUBERCULOSIS, ther.
intrabronchial instillations of antimicrobial drugs in cavities ther. (Pol))

GRANICZNY, A.

"Exploration and Determination of Ores of Nonferrous Metals." p.39
(PRZEGLAD GEOLOGICZNY No. 1/2, Jan./Feb. 1954 Warszawa, Poland)

SO: Monthly List of East European Accessions, LC, Vol. 3, no. 5, May 1954/Uncl.

GRANICZNY, A.

"Terminology and comprehension of some basic activities in geology," Przeglad Geologiczny, Warszawa, No 7, July 1954, p. 289.

SO: Eastern European Accessions List, Vol 3, No 11, Nov 1954, L.C.

GRANICZNY, S.

The spring work of plant culture. p. 36. (LAS POLSKI. Vol. 26, no. 3, Mar. 1952.

SO: Monthly List of East European Accessions, L.C., Vol . 3, No. 4, April, 1954

K

Country : POLAND
Category: Forestry. Forest Biology and Typology.

Abs Jour: RZhBiol., No 12, 1958, No 53451

Author : Graniczny, St.
Inst : -
Title : Contemporary Research on the Territory of Bialowieski National Park.

Orig Pub: Sylwan, 1956, A100, No 1, 59-61.

Abstract: This article notes the many sided character of the biological studies in the Bialowieski park. It gives a brief historical reference to the chief periods of the research activity: up to 1928, 1929-1943 and 1944 to the present. The enormous significance of the complex studies of the third period for various professions is emphasized.

Card : 1/1

GRANICZNY, S.

AGRICULTURE

Periodicals: LAS POLSKI. Vol. 31, no. 21, Nov. 1957

GRANICZNY, S. Impressions from the visit of forests in the Baltic region. Pt. 2. (To be contd.) p.8.

Monthly List of East European Accessions (EEAI) LC, Vol. 8, No. 2, February 1959, Unclass.

COUNTRY : Poland K
CATEGORY : Forestry. Forest Cultures.

ABS. JOUR. : RZhBiol., No. 4,1959, No. 15503

AUTHOR : Graniczny, Stefan
INST. :
TLE : Facts about Increasing the Diversity of the Species Composition of Pine Cultures.

ORIG. PUB. : Las polski, 1957, 31, No.22, 12-13

ABSTRACT : In the opinion of the author, the principal species in dry, fresh, moist, and mixed young pine forests should be the pine, and leafy types should play a subordinate role. In dry and fresh young forests a mixture is expedient from the biocenotic and soil-protective aspects, and in a mixed young forest the admixture of leafy species has a biocenotic and educational value. Only in mixed types do the pines bow to the importance of

CARD: 1/2

GRANICZNY, S.

Observations on the development of plant vegetation in Bialowieza National Park.p.36

SYLWAN: (Wydzial Nauk Rolniczych i Lesnych Polskiej Akademii Nauk i Polskie Towarzystwo Lesne) Warszawa, Poland (Journal on forestry issued by the Section of Agricultural and Forestry Sciences, Polish Academy of Sciences; and the Polish Society of Forestry; with English and Russian Summaries. Includes Supplements; Biuletyn Instytutu Badawczego Lesnictwa, bulletin of the Forest Research Institute; Biuletyn Instytutu Technologii Drewna, bulletin of the Institute of Wood Technology; Przeglad Dokumentacyjny Drzewnictwa, Documentation of the Institute of Wood Technology; and Prezeglad Dokumentacyjny Lesnictwa, documentation of the Forest Research Institue. Monthly)
Vol. 101, no. 4, Apr. 1957

Monthly List of East European Accessions Index (EEAI), LC, VOL. 8, no. 6, June 1959
Uncl.

GRANICZNY, S.

Introductory proposals for improving the binding principles of tree felling. I. (To be contd.) p. 6.

LAS POLASKI. (Ministerstwo Lesnictwa oraz Stowarzyszenie Naukowo-Techniczne Inzynierow i Technikow Lesnictwa i Drzewnictwa) Warszawa, Poland. Vol. 32, no. 10, May 1958.

Monthly List of East European Accession (EEAI) LC, Vol. 9, no. 1, Jan. 1960. Uncl.

GRANICZNY, S.

A simplified method for defining the conditions of sunlight, the basic ecologic factor in silviculture. p. 31.

SYLWAN (Wydzial Nauk Rolniczych i Lesnych Polskiej Akademii Nauk i Polskie Towarzystwo Lesne) Warszawa, Poland. Vol. 103, no. 4, Apr 1959

Monthly List of East European Accessions (EEAI) LC, Vol. 8, no. 9, September 1959. Uncl.

GRANIECZNY, S.

3642 542.941/.943 : 542.973 : 547.758.5

Krause A., Granieczny S., Wolski W. Concerning Double-Faced Carrying Properties of Aluminium Hydroxide in Redox Systems.

„O dwulicowych własnościach nośnikowych wodorotlenku glinowego w układach redukcyjno-oksydacyjnych". Roczniki Chemii (PAN). No. 3, 1954, pp. 377-384, 4 tabs.

Double-faced properties of aluminium hydroxide in the reaction of oxidation of water solution of indigo carmine by means of hydrogen peroxide at 37°. Aluminium hydroxide alone inhibits this reaction, but in combination with traces of certain other cations—such as Cu^{++}, Cr^{+++}, Co^{++}, it has an accelerating influence, intensified with the increasing concentration of $Al(OH)_3$.

CH

GRANIEWSKI, Stanislaw; WIECHNO, Wojciech

Intrahepatic cholelithiasis. Wiad. lek. 18 no.14:1157-1161 15 Jl '65.

1. Z Oddzialu Chir. Szpitala Bielanskiego w Warszawie (Ordynator: doc. dr. med. W. Wiechno).

S/077/61/005/005/006/006
B019/B059

AUTHORS: Dubovik, A. S., Granigg, ~~A. B.~~

TITLE: On the work of the Section for Photographic Recorders at the Second All-Union Conference on High-speed Photography and Cinematography

PERIODICAL: Zhurnal nauchnoy i prikladnoy fotografii i kinematografii, v. 5, no. 5, 1961, 397 - 400

TEXT: In the Sektsiya s"yemochnoy apparatury na vtorom vsesoyuznom soveshchanii po vysokoskorostnoy fotografii i kinematografii (Section for Photographic Recorders at the Second All-Union Conference on High-speed Photography and Cinematography), A. S. Dubovik (IKhF AS USSR) held a lecture on the mode of operation of a number of reflector compensators of film motion. A. B. Granigg, Ye. A. Tarantov, and I. I. Kryzhanovskiy read papers on problems of calculation and construction. Granigg (IKhF AS USSR) derived an equation which permits the calculation of the basic data of a camera, such as recording speed, light intensity, etc. Tarantov gave formulas for the calculation of the "dynamic resolution", for the calculation of the

Card 1/2

S/077/61/005/005/006/006
B019/B059

On the work of the Section for...

picture shift during exposure, etc. Kryzhanovskiy made a report on a camera designed in the LITMO taking up to 500 000 pictures per second on a 16-mm film which can be used in a standard 16-mm projector. S. G. Grenishin and Yu. P. Shchepetkin (GOI) spoke on a new film transporter which operates smoothly. In as much as the film is transported over drums. The design and manufacture of lens screens was discussed by S. P. Ivanov and L. V. Akimakina (NIKFI). O. F. Grebennikov, V. B. Gusev, and S. M. Provornov (LIKI) gave a report on a camera of the type РКС-11 (RKS-11) with two lens screens which was worked out by them. L. A. Vasil'yev, L. A. Skuratova, and Ye. A. Tarantov investigated the use of screen cameras with dark-field and interference devices for gasdynamical investigations. V. V. Garnov and A. S. Dubovik (IKhF AS USSR) described the stereophotography by means of an СФР (SFR) camera with 1 250 000 pictures per second. N. V. Sel'tsov (LAFOKI AS USSR) suggested some attachments and alterations of the СКС (SKS) camera, which should widen the field of application of this camera. The improvements concern control before and after picture taking, attachments for macrotakings and an enlargement of the diaphragm. There are 3 figures.

Card 2/2

DUBOVIK, A. S., GRANIGG, A. B.

"About the Determination of Sweep Centre and the Unequalness of the Framing Rate in Framing Cameras with Commutating Mirror"

report presented at the 6th Intl. Cong. of High-Speed Photography, The Hague, 17-22 Sep '62

4

SHNIRMAN, G. L., DUBOVIK, A. S., KEVLISHVILI, P. V., GRANIGG, A. B. KOROLOV, I. A.

"The High Speed No Dead-Time Framing Camera MAB-1"

report presented at the 6th Intl. Cong. of High-Speed Photography, The Hague, 17-22 Sep '62

DUBOVIK, A.S.; GRANIGG, A.B.

Design and calculation of high-speed cameras with commutation of the image. Zhur.nauch.i prikl.fot.i kin. 7 no.1:36-47 Ja-F '62. (MIRA 15:3)

1. Institut khimicheskoy fiziki AN SSSR.
(Cameras)

L 10176-63 EWT(1)/BDS/EED(b)-2/ES(v)—
ASD/RADC/SSD—Pe-4—IJP(C)
ACCESSION NR: AP3001619 S/0030/63/000/005/0073/0075

AUTHOR: Shnirman, G. L.; Dubovik, A. S.; Kevlishvili, P. V.; Granigg, A. B.; Korolev, I. A.

TITLE: New camera for high-speed photography

SOURCE: AN SSSR. Vestnik, no. 5, 1963, 73-75

TOPIC TAGS: high-speed photography, photographing physical phenomena

ABSTRACT: The Institut khimicheskoy fiziki Akademii nauk SSSR (Institute of Physical Chemistry, Academy of Sciences SSSR) has designed and built the ZhLV-1 camera for photographing high-speed luminescent phenomena, e.g., high-temperature plasma, combustion and explosion processes, and shock waves. The orginality of the mirror-scanning system, the automation of operation, and the camera's advanced engineering characteristics make it a very powerful tool for investigation. The camera can be used for frame photography with a speed of 45,000 to 4,200,000 frames per second and as a photorecorder with slit scanning and time resolution of up to 2 x 10 sup -8 sec. The frame size and image

Card 1/2

L 10176-63
ACCESSION NR: AP3001619

scale can be selected according to the experimental conditions. The focal length varies from 50 to 450 mm. Continuous photorecording is done by means of mirror scanning, which is accomplished by two plane-parallel mirrors crossed at an angle of 45° and located on one axis of rotation in two circles, one above the other. The camera is controlled remotely. The operator controls the supply voltage and the vacuum pump manually; all other operations proceed automatically. There is a system for recording the rotations of mirrors during photographing. The mirror-scanning, frame-photographing, and photorecording with slit scanning processes are shown diagramatically. Orig. art. has: 4 figures.

ASSOCIATION: none

SUBMITTED: 00	DATE ACQ: 21Jun63	ENCL: 00
SUB CODE: 00	NO REF SOV: 000	OTHER: 000

Card 2/2

SHNIRMAN, G.L.; DUBOVIK, A.S.; KEVLISHVILI, P.V.; GRANIGG, A.B.; KOROLEV, I.A.

High-speed "ZhLV-1" time lapse camera. Zhur.nauch.i prikl. fot.i kin. 8 no.1:50-56 Ja-F '63. (MIRA 16:2)

1. Institut khimicheskoy fiziki AN SSSR.
(Cameras) (Photography, Time lapse)

DUBOVIK, A.S.; GRANIGG, A.B.

Determining of the position of the scanning center and the irregularity of the frequency of picture taking in high-speed cameras with image conversion. Zhur. nauch. i prikl. fot. i kin. 8 no.4:276-283 Jl-Ag '63. (MIRA 16:7)

1. Institut khimicheskoy fiziki AN SSSR.
(Photography, High-speed) (Cameras)

GRANIGG, A.B.

Some problems of the design of high-speed motion-picture cameras with reflex image scanning. Usp.nauch.fot. 9:40-47 '64. (MIRA 18:11)

AUTHORS: Granigg, A. B.; Dubovik, A. S.

TITLE: High-speed driven-type camera. Class 57, No. 165965

SOURCE: Byulleten' izobreteniy i tovarnykh znakov, no. 20, 1964, 81

TOPIC TAGS: camera

ABSTRACT: This Author Certificate describes a high-speed driven-type camera (see the Enclosure) which records the images on photographic films placed on [illegible] a cylindrical surface. These sections form working sectors containing two inlets, situated on a single plane, and a mirror polygon. To simplify the process of deciphering the recording within the given total time, the working sectors are made alike and are situated in the plane containing the inlets. These inlets record only in one sector, and the last record in the terminal section of one sector corresponds to the first record on the initial section of the following sector. These sections are placed in the scanning path. Orig. art. has: 1 figure.

ASSOCIATION: none

SUBMITTED: 24Oct63 ENCL: 01

SUB CODE: IE, ES NO REF SOV: 000 OTHER: 000

Card 1/2

L 13515-65
ACCESSION NR: AP4048974

ENCLOSURE: 01

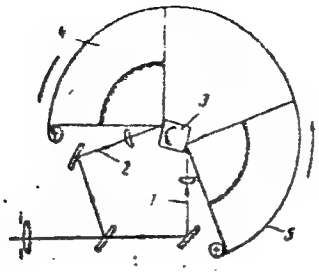

Fig. 1.

1 and 2- inlets; 3- mirror polyhedron; 4 and 5- moving sectors.

Card 2/2

ACCESSION NR: AP5007496 S/096/65/000/004/0105/0105

AUTHOR: Zel'manov, I. L.; Shnirman, G. I.; Dubovik, A. S.; Granigg, A. B.

TITLE: Driven type high-speed camera. Class 57, No. 164[illegible]

SOURCE: Byulleten' izobreteniy i tovarnykh znakov, no. 4, 1965, 105

TOPIC TAGS: rotating mirror camera, high speed camera

ABSTRACT: This Author Certificate presents a driven type high-speed camera with two [illegible] containing a rotating triangular mirror. To simplify the construction and to [illegible] adjustment and operation of the [illegible], four rotating sectors differing [illegible] equal in pairs are placed in the plane of the inputs (see Fig. 1 on the [illegible]). The larger sector is placed [illegible] of the inputs and the [illegible] placed on the other side. The angle between the input and the nearer side of the large sector is smaller than the angle between the input and the nearer side of the small sector. The corresponding angles about the inputs are equal. Orig. art. has: 1 diagram.

ASSOCIATION: none

SUBMITTED: 13Sep63 ENCL: 01 SUB CODE: ES

NO REF SOV: 000 OTHER: 000

Card 1/2

ACCESSION NR: AP5007496

ENCLOSURE: 01

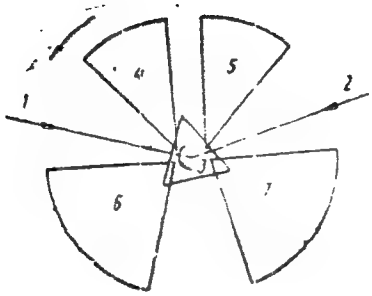

Fig. 1. Driven type high-speed camera
1 and 2 - inputs; 3 - triangular mirror;
4-7 - operating sectors

L 43984-66 EWT(1)/T IJP(c) JGS

ACC NR: AP6030147 SOURCE CODE: UR/0120/66/000/004/0154/0156

AUTHOR: Gorbenko, B. Z.; Granigg, A. B; Drozhbin, Yu. A.; Korinfskiy, D. F; Tolmachev, A. M.

ORG: none

TITLE: Moving-image camera with an electron-optical converter

SOURCE: Pribory i tekhnika eksperimenta, no. 4, 1966, 154-156

TOPIC TAGS: high speed camera, electrooptic camera

ABSTRACT: An FEP-1 photographic chronograph capable of recording events at speeds of 20-160 km/sec is described. The system is suitable for determining the luminescence time in GaAs crystal p-n junctions, and for recording high-speed transient processes associated with exploding wires and the electrical discharge in gases. The photochronograph consists of an optical system, an image converter, a two stage light amplifier, and the control circuits. The optical part has a mirror lens with a focal length and a relative aperture of 2000 mm and 1:10, respectively. A vertical time controlled slit in the focal surface of the input lens allows the light to reach the electron-optical converter cathode. After amplification by the converter, the image of the process under study is time swept, displayed on its screen, and then photographed on film. Each image on the film contains time marks whose error is not greater than ±0.4%. The electronic control circuits consist of a sweep generator

Card 1/2 UDC: 621.383.6:778.37

L 43984-66

ACC NR: AP6030147

(capable of forming 4 kv, 0.25 μsec pulses with a linearity error of less than 2%), a shutter pulse generator, a time mark generator (forming 3—5 μsec, 200 v pulses), starting and other auxilliary circuits. The time resolution of this system is at best 6×10^{-10} sec. Its spectral sensitivity range is from 4000 to 12000 A. The distortion of the photographed images does not exceed 7%. The installation measures 2200 x 470 x 700 mm. Orig. art. has: 3 figures. [BD]

SUB CODE: 14, 09/ SUBM DATE: 30Jun65/ ORIG REF: 005/ ATD PRESS: 5071

Card 2/2 ULR

GRANIK, A.

Closer to students'needs. Prof.-tekh. obr. 12 no.11:19 N '55. (MLRA 9:2)

1.Prepodavatel' uchilishcha mekhanizatsii sel'skogo khozyaystva No.16 (Nikolayevskaya oblast').
(Farm mechanization--Study and teaching)

KUZNETSOV, A.P., inzh.; GRANIK, Ch.B., inzh.

Nomograms of the working parameters of a low-temperature two-refrigerant system refrigerating plant. Khol. tekh. i tekh. no.1:54-60 '65. (MIRA 18:9)

GRANIK, G. (Magadan)

Development of productive forces of the northeast. Vop. ekon. no.1:155-158 Ja '60. (MIRA 13:1)
(Magadan Province--Economic policy)

ROGOVIN, Naum Aleksandrovich; GRANIK, G.B., inzh., red.; MIKHAYLENKO, Yu.Ya., red.; SHTEYNBERG, L.K., tekhn.red.

[Advanced methods in the building of steam power plants] Peredovye metody stroitel'stva teplovykh elektrostantsii. Moskva, Orgenergostroi, 1958. 53 p. (MIRA 13:6)
(Steam power plants) (Construction)

GRANIK, G.B., inzh.

Reducing the time and lowering construction costs during the initial stages of building thermoelectric power plants. Prom stroi. 37 no.5:26-30 My '59. (MIRA 12:7)

1. Institut Orgenergostroy.
(Electric power plants) (Construction industry--Costs)

GRANIK, G.B., inzh.

Tables of temporary structures and means of mechanization for constructing thermal power plants. Prom. stroi. 39 no. 1:11-16 '61. (MIRA 14:1)

1. Moskovskiy filial instituta Orgenergostroy.
(Electric power plants--Design and construction)

GRANIK, G.B., inzh.

Regional production bases for manufacturing large-scale reinforced concrete elements for thermal electric stations. Prom stroi. 39 no.6:58-60 '61. (MIRA 14:7)
(Electric power plants)
(Reinforced concrete)

GRANIK, G.B., inzh.

Organization of the construction of the Lithuanian State Regional Electric Power Plant. Energ. stroi. no.27:6-15 '62. (MIRA 15:9)

1. Moskovskiy filial Vsesoyuznogo instituta po proyektirovaniyu organizatsiy energeticheskogo stroitel'stva.
(Lithuania--Electric power plants)

GRANIK, G.B.

Some problems of organizing the construction of thermal electric plants. Prom.stroi. 40 no.4:4-9 '62. (MIRA 15:5)
(Electric power plants)

GRANIK, G.B., inzh.

Design and organization of the construction of thermal electric power plants should be continuously improved. Energ. stroi. no.33:7-14 '63. (MIRA 17:8)

1. Moskovskiy filial Vsesoyuznogo instituta po proyektirovaniyu organizatsiy energeticheskogo stroitel'stva.

GRANIK, G.B., inzh.

Organizing the construction of a great capacity thermal electric power plant of standard design. From. stroi 40 no.7:8-14 Jl '63. (MIRA 16:10)

GRANIK, G.B., inzh.

Construction of thermal electric power plants on a continuous long-range basis. Prom. stroi. 41 no.6:6-10 Je '64.
(MIRA 17:9)

GRANIK, G.I.

Main problems in developing the most important branches of industry in the northeastern U.S.S.R. Prob. Sev. no.5: 32-46 '63. (MIRA 16:11)

1. Sovet po izucheniyu proizvoditel'nykh sil pri Gosplane SSSR.

ACCESSION NR: AP4037064 S/0129/64/000/005/0010/0013

AUTHOR: Chudnovskaya, L. A.; Bernshteyn, M. L.; Granik, G. I.; Gladshteyn, V. A.

TITLE: Thermomagnetic Tempering of "R-18" Steel

SOURCE: Metallovedeniye i termicheskaya obrabotka metallov, no. 5, 1964, 10-13

TOPIC TAGS: austenite transformation, variable magnetic field, tempering, bend test, automated heat treatment, high speed steel

ABSTRACT: The authors consider the possibility of accelerating the austenite transformation during magnetic tempering of high-speed steel in: (1) 75 mm-long specimens prepared from a ground rod with an 8 mm diam used for the determination of the amount of residual austenite and Hc; (2) 30 mm-long dilatometric specimens prepared from a ground rod with a 3 mm diam; and (3) 4.5 x 4.5 x 50 mm specimens prepared from 25 x 15 mm hot-rolled strip for bending tests. Tempering with the application of a 600 and 1200 e variable magnetic field greatly accelerates the transformation of residual austenite at 550-560 C; 30 min. holding results in complete transformation. The magnetic field has the same effect when applied during holding and quenching. Bending strength is enhanced at all temperatures.

Card 1/2

ACCESSION NR: AP4037064

The application of a magnetic field enhances austenite decomposition time by one and a half after a 500 C temper, 60 min holding period and quenching from 1300 C. Residual austenite content was 3% as against 10% without a magnetic field. The expedience of replacing the current technique of prolonged triple tempering by single tempering and the employment of a magnetic field was tested by the authors in 6 mm-diam. drills hardened by heating to 1280 C in a salt bath for 1.5 minutes and cooling in saltpeter to 400-500 C. After pickling the specimens were subjected to various tempering conditions with and without a magnetic field. The authors found that accelerated magnetic field tempering would make automation possible in the heat treatment of high-speed steel tools. Orig. art. has: 6 figures.

ASSOCIATION: Moskovskiy institut stali i splavov (Moscow Institute of Steel and Alloys), VNII (All Union Scientific Research Institute)

SUBMITTED: 00 DATE ACQ: 05Jun64 ENCL: 00

SUB CODE: MM NO REF SOV: 001 OTHER: 000

Card 2/2

CHUDNOVSKAYA, L.A.; BERNSHTEYN, M.L.; GRANIK, G.I.; GLADSHTEYN, V.A.

Thermomagnetic quenching of P18 steel. Metalloved. i term. obr. met. no.5:10-13 My '64. (MIRA 17:6)

1. Moskovskiy institut stali i splavov i Vsesoyuznyy nauchno-issledovatel'skiy instrumental'nyy institut.

GRANIK G.I.

GRANIK, G.I., kand.ekon.nauk

Present and future of Yakutia river fleet. Rech.transp.16 no.11:25-26 N '57. (MIRA 10:12)

(Yakutia--Inland water transportation)

GRANIK, G.I., kand. ekon. nauk

River transportation in IAna, Indigirka, and Kolyma Basins.
Rech. transp. 17 no.3:15-18 Mr '58. (MIRA 11:4)
(Yakutia--Inland river transportation)

GRANIK, G.I.

Transportation in northern Yakutia and principal problems in its development. Probl.Sev. no.3:160-167 '59. (MIRA 13:4)

1. Sovet po izucheniyu proizvoditel'nych sil AN SSSR.
(Yakutia—Transportation)

GRANIK, Grigoriy Il'ich, kand. ekon. nauk; CHURASHOV, N.Ya., red.; YANOVSKIY, V.V., red.; YURCHENKO, L.I., red.; FEDOROVA, V.V., tekhn. red.

[Transportation in Magadan Province; present-day condition and development problems] Transport Magadanskoi oblasti; sovremennoe sostoianie i problemy razvitiia. Magadan, Magadanskoe knizhnoe izd-vo, 1960. 61 p. (MIRA 14:9)
(Magadan Province—Transportation)

GRANIK, G. I.

"Transport Development in the Arctic and Subarctic."

report to be submitted for the Intl. Geographical Union, 10th General Assembly and 19th Intl. Geographical Congress, Stockholm, Sweden, 6-13 August 1960.

SLAVIN, S.V., doktor ekonom.nauk; GRANIK, G.I., kand.ekonom.nauk; KUZAKOV, K.G., kand.ekonom.nauk; MIKHAYLOV, S.V., kand.ekonom.nauk; SHAPALIN, B.F., kand.geograf.nauk; KAMENITSER, L.S., nauchnyy sotrudnik; MOSKVIN, D.D., nauchnyy sotrudnik; TYURDENEV, A.P., nauchnyy sotrudnik; LEDENTSOVA, N.A., inzh.; KOZLOV, B.K., kand.tekhn.nauk, starshiy nauchnyy sotrudnik; BRONSHTEYN, L.B., starshiy nauchnyy sotrudnik; BOVKUN, A.Ye.; VERSHININ, A.A., okhotoved; SERGEYEV, M.A., retsenzent; AGRANAT, G.A., kand.geograf.nauk, red.; PUZANOVA, V.F., kand.geograf. nauk; SHENKMAN, V.I., red.izd-va; BRUZGUL', V.V., tekhn.red.

[Problems in the development of the productive forces of Kamchatka Province] Problemy razvitiia proizvoditel'nykh sil Kamchatskoi oblasti. Moskva, 1960. 420 p. (MIRA 13:7)

1. Akademiya nauk SSSR. Sovet po izucheniyu proizvoditel'nykh sil. Sektor prirodnykh resursov i ekonomiki Severa. 2. Zaveduyushchiy Sektorom prirodnykh resursov i ekonomiki Severa Soveta po izucheniyu proizvoditel'nykh sil AN SSSR (for Slavin). 3. Institut energetiki AN SSSR (for Kozlov). 4. Tikhookeanskiy rybnyy institut (TINRO) (for Bronshteyn). 5. Starshiy ekonomist Kamchatskogo oblplana (for Bovkun). 6. Kamchatskoye otdeleniye Vsesoyuznogo nauchno-issledovatel'skogo instituta zhivotnogo syr'ya i pushniny (for Vershinin).
(Kamchatka Province--Economic conditions)

SLAVIN, S.V., doktor ekon. nauk; GRANIK, G.I., kand. ekon. nauk; LOGINOV, V.P.; MIKHAYLOV, S.V.; SHAPALIN, B.F., kand. geogr. nauk; AVAKYAN, M.I., nauchnyy sotr.; ZAKHAROV, G.A., nauchnyy sotr.; KAMENITSER, L.S., nauchnyy sotr.; TITOVA, N.I., nauchnyy sotr.; TYURDENEV, A.P., nauchnyy sotr.; CHUGUNOV, B.I., starshiy nauchnyy sotr.; KOGAN, I.L.; MESHKOVSKAYA, L.V., starshiy inzh.; LUKIN, I.I.; FAYERSHTEYN, R.I.; Prinimali uchastiye: Agranat, G.A., kand. geogr. nauk, red.; PUZANOVA, V.F., kand. geogr. nauk, red.; KUPRIYANOV, A.B., nauchnyy sotr., red.; SOBOLEV, Yu.A., red. izd-va; TIKHOMIROVA, S.G., tekhn. red.

[Problems in developing the productive forces of Magadan Province] Problemy razvitiia proizvoditel'nykh sil Magadanskoi oblasti. Moskva, Izd-vo Akad. nauk SSSR, 1961. 301 p. (MIRA 15:1)

1. Akademiya nauk SSSR. Sovet po izucheniyu proizvoditel'nykh sil. 2. Glavnyye inzhenera proyekta "Dal'stroyproyekt" (for Kogan, Fayershteyn). 3. Institut ekonomiki Akademii nauk SSSR (for Chugunov). 4. Energoupravleniye Magadanskogo Soveta narodnogo khozyaystva (for Meshkovskaya). 5. Nachal'nik Oblastnogo otdela po delam stroitel'stva i arkhitektury Magadanskoy oblasti (for Lukin).
(Magadan Province—Industries) (Magadan Province—Economic policy)

S/200/61/000/007/001/006
D238/D302

AUTHOR: Granik, G.I.

TITLE: Questions of mastering the natural resources of the North-East of the USSR

PERIODICAL: Akademiya nauk SSSR. Izvestiya. Sibirskoye otdeleniye, no. 7, 1961, 3 - 12

TEXT: The author reviews the natural resources of the North-East of the USSR -- a vast, sparsely-populated territory of some 4.3 million km^2 -- and discusses the problems of their exploitation that were raised at the XXI Party Congress. The economic development of the region is restricted by its size, remoteness and climate and by the lack of communications. Despite these difficulties, however, the net cost of mining non-ferrous metals in the area is considerably lower than in other parts of the USSR owing to the high grade of the ore deposits. The discovery of huge diamond pipes in Western Yakutiya -- in the Malo-Botuobin, Sredne-Markha, Daldyn,

Card 1/5

Verkhne-Tyunga, Verkhne-Muna, Alakitsk and Sredne-Olenek areas -- is of extreme significance since their exploitation will enable the Soviet Union to become self-sufficient in this vital commodity. The fulfilment of this ambition necessitates the expansion of existing power and transportation facilities; the construction of the Vilyuy hydroelectric station, new docks at Mukhtya and Zhigansk and a highway between Zhigansk and Daldyn. Further large and rich deposits of gold have recently been found at Chukotka, where new smelters are to be erected, at Aldan and along the coast of the Okhotsk Sea. The importance of these deposits is enhanced by the fact that they can be mined under very favorable conditions. The large Deputate, Ilin-Tass, Alys-Khay and Burgochany deposits of tin and the smaller deposits of Primor'ya will play an ever-increasing role in the regions economy, while geologic exploration has revealed the existence of further reserves of tin in the Polousnom Range. Mica and tungsten are also known to occur in considerable quantities in various parts of the North-East. The existence of extensive coal and iron-ore deposits situated within 60 - 100 km of each other in Southern Yaku-

tiya is conducive to establishing local centers of ferrous metallurgy. The coal reserves of this part of Yakutiya amount to some 40.8 billion tons, while the reserves of proved and possible iron-ore total about 1.9 billion tons. A new iron and steel works is scheduled for the town of Chul'man in view of its proximity to Lake Baykal. Geologic prospecting has proved up to 1 billion tons of rock-salt in Yakutiya, over half of this tonnage being concentrated in the single Solyanskoye deposit. It will eventually be possible to meet all the salt requirements of Yakutiya, Kamchatka, Sakhalin and Primor'ya from the salt mines of the Olekminsk area. The Lena-Arctic Ocean route will be used for this purpose, although there is the alternative of shipping salt down the Lena and thence by railroad to the Vladivostok area; this latter route may, in fact, be more suitable in view of the possible development of a large market for Olekminsk salt in Japan. There are indications of oil in the Anadyrskaya Lowlands, but further prospecting is necessary before the oil potential of this region can be correctly assessed. Pools with a possible content of 900 billion m^3 of natural gas

S/200/61/000/007/001/006
D238/D302

Questions of mastering ...

have been discovered in the Vilyuy basin and in various parts of the Priverkhoyansk depression. A gas pipeline between Tass, Tumus, Yakutsk and Pokrovsk is to be built within seven years, and additional pipelines are planned for the future. Owing to the absence of railroads and the small number of highways most bulk commodities have to be transported by sea or river. Certain developments in the communications field are accordingly suggested: The building of a highway from Tommot via Yakutsk and Khandyga to Kadykchan and of other motor-roads in the Khandyga-Ege Khay, Kobyume-Marshal'skiy, Nizhniye Kresty-Bilibino and Mukhtuy-Mirnyy areas; and the construction of a railroad from Bam through Aldan and Yakutsk to Magadan. On completion of these projects much of the North-East will be linked with the existing highway and railroad networks of the USSR. In conclusion, the author notes that the foregoing developments will lead to the creation of the following industrial districts and regions: the Aldan district -- mining of gold, mica, quartz and coal; Western Yakutiya -- diamond-mining; Central Yakutiya -- oil and gas exploitation; North-East Yakutiya -- mining of gold, tin and polymetals; the Kolymo-Magadan district -- gold- and tin-mining,

Card 4/5

Questions of mastering ... S/200/61/000/007/001/006
D238/D302

metal-refining and fishing; the Chukotka national region -- mining of gold, tin and tungsten.

ASSOCIATION: Sovet po izucheniyu proizvoditel'nykh sil pri gosekonomsovete SSSR (Committee for the Study of Productive Forces, State Economics Council, USSR)

SUBMITTED: July 29, 1960

Card 5/5

GRANIK, G.I.

Annals of navigation on Yakut rivers. Let. Sev. 3:211-222 '62. (MIRA 15:8)

1. Sovet po izucheniyu proizvoditel'nykh sil pri Prezidiume AN SSSR.

(Yakutia—Inland navigation)

GRANIK, G.I.

Problems in industrial development and comprehensive utilization of natural resources in northwestern Russia. Izv. AN SSSR. Ser. geog. no.6:23-32 N-D '65. (MIRA 18:11)

1. Sovet po izucheniyu proizvoditel'nykh sil pri Gosplane SSSR.

ACCESSION NR: AP5016520

The effect of a magnetic field on

Card 1/2

L 03351-65

ACCESSION NR: AP5016530

[illegible] of carbon content than of nickel content. After samples were tempered and [illegible] a magnetic field of 10,000 oersteds, [illegible] and coercive [illegible] determined in all samples. At temperatures below [illegible] of austenite decomposition, it was found that martensite in the magnetic field is transformed much [illegible]. Application of the magnetic field also results in increased etchability [illegible] finer, longer martensite crystals with better [illegible]. These changes [illegible] reflected in a 10-15% increase in [illegible] but which [illegible] equal in samples in both [illegible] the magnetic field. It is stated [illegible] field intensifies the austenite-martensite [illegible] during [illegible] tempering, retards the decomposition [illegible] at elevated [illegible] temperatures it accelerates austenite decomposition [illegible] orig. art. has.

[illegible] Moskovskiy institut stali i splavov (Moscow Institute of Steel and [illegible]

SUBMITTED: 31Jan64 ENCL: 00 SUB CODE: MM, EM

NO. REF SOV: 006 OTHER: 002

Card 2/2

ACC NR: AP7005758 SOURCE CODE: UR/0126/67/023/001/0158/0161

AUTHOR: Bernshteyn, M. L.; Granik, G. I.; Zaymovskiy, V. A.

ORG: Moscow Institute of Steel and Alloys (Moskovskiy institut stali i splavov)

TITLE: The effect of cyclic thermomagnetic treatment near the Curie point on the ductility of iron

SOURCE: Fizika metallov i metallovedeniye, v. 23, no. 1, 1967, 158-161

TOPIC TAGS: alloy heat treatment, iron, alloy steel, ductility, thermomagnetic effect, Curie point, iron property, steel property/Armco iron, 40Kh steel

ABSTRACT: Armco iron specimens were heated for five cycles, each at 750 for 10 min and 790°C for 10 min; after which the temperature was rapidly raised to 920°C where the specimens were held for 3 minutes and then quenched in water. The thermal treatment was conducted in a constant magnetic field of 10,000 oersteds. It was found that magnetic treatment lowered the nil-ductility temperature of the Armco iron specimens. For instance, at - 96°C the notch toughness was increased from 3.5 kgm/cm^2 (cyclic heat treatment without magnetic field) to 11 kgm/cm^2 (cyclic thermomagnetic treatment), and at -75°C it was increased from 6.5 to 19 kgm/cm^2, respectively. Thermal treatment of 40Kh steel

ACC NR: AP7005758

specimens consisted of cyclic treating at 700—760°C, rapid heating to 860°C, where they were held for 7 min, and quenched in oil. Heat-treatment of these specimens was also conducted in a constant magnetic field of 10,000 oersteds. The specimens were tested for their mechanical properties. The results are shown in Fig. 1.

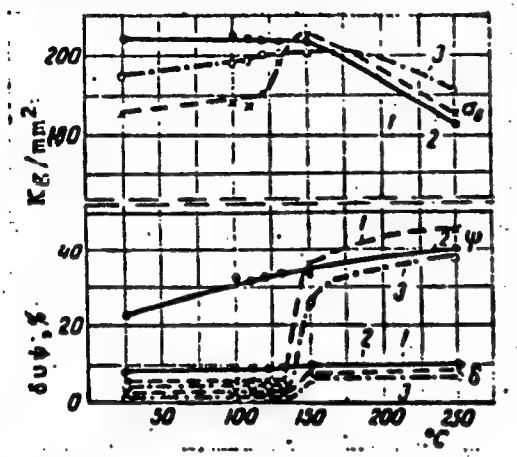

Fig. 1. The effect of cyclic thermomagnetic treatment on the mechanical properties of 40Kh steel:

1— Standard heat treatment;
2— cyclic thermomagnetic treatment;
3— cyclic heat treatment without magnetic field;
δ— elongation;
ψ— reduction of area;
σ_B— tensile strength.

Orig. art. has: 3 figures.
SUB CODE: 11,13/ SUBM DATE: 29Dec65/ ORIG REF: 003/ OTH REF: 002 [TD]
Card 2/2

L 47356-66 EWT(d)/EWP(1) IJP(c) BB/GG

ACC NR: AP6030575 SOURCE CODE: UR/0413/66/000/016/0055/0056

16

B

INVENTOR: Belousov, B. V.; Granik, V. A.

ORG: none

16

TITLE: Magnetic memory element. Class 21, No. 184937

SOURCE: Izobreteniya, promyshlennyye obraztsy, tovarnyye znaki, no. 16, 1966, 55-56

TOPIC TAGS: magnetic memory element, memory element

ABSTRACT: An Author Certificate has been issued for a magnetic memory element (see Fig. 1), made with a BIAX-type magnetic conductor, containing recording, answering, and output windings; the answering and output windings are broached in different apertures. To obtain a ternary memory element with nondestructive information readout, an additional winding is used which is passed through the answering aperture. The pulse is sent over this winding before the recording cycle to set the magnetic recording conductor at "zero". Orig. art. has: 1 figure. [Translation] [NT]

Card 1/2 UDC: 681.142.07

L 47356-66

ACC NR: AP6030575

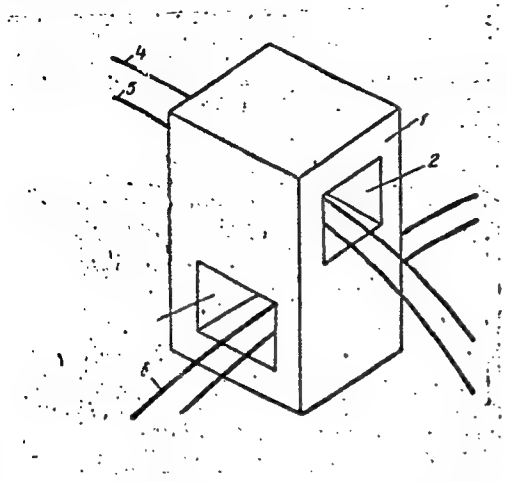

Fig. 1. Magnetic memory element. 1—BIAX; 2—recording opening; 3—reading opening; 4—recording winding; 5—output winding; 6—setting winding; 7—answering winding.

SUB CODE: 09/ SUBM DATE: 02Jul65/

Card 2/2 mt

GRANIK, Z. I.

CA

7

Chemical control in finishing the surface of steel wire.

I. I. Valushenko and Z. I. Granik. *Zavodskaya Lab.* 15, 1000-7(1949).—The H_2SO_4 concn. in a pickling bath can be detd. with sufficient accuracy by titration with alkali hydroxide up to formation of Fe and Cu hydroxides without indicators. $FeSO_4$ is detd. by $KMnO_4$ titration and Cu by the iodometric method. Ca pptd. as $CaCO_3$ is detd. by titration with 0.5 *N* HCl to disappearance of phenolphthalein color. G. M. Kosolapoff

TINYAKOV, G.G.; ORANIKOV, D.A.; MIKHEYEVA, G.A.

Microstructure of hard rennet cheeses. Izv. vys. ucheb. zav.; piehch. tekh. no.4:68-74 '61. (MIRA 14:8)

1. Moskovskiy tekhnologicheskiy institut myasnoy i molochnoy promyshlennosti, kafedra tekhnologii moloka i molochnykh produktov i kafedra anatomii i gistologii.
(Cheese)

GRANIL'SHCHIKOV, P. A.

24096 GRANIL'SHCHIKOV, P. A. Industrial'nyy metod ukladki uzkokoleynykh lesovoznykh zheleznykh dorog. Les. Prom-st', 1949, No. 7, S. 9-11.

SO: Letopis, No. 32, 1949.

GRANIL'SHCHIKOV, V.A. inzhener.

Industrial methods of building apartment houses in the Donets Basin. Stroitel' 2 no.4-5:10 Ap-My '56. (MLRA 10:1)
(Donets Basin--Apartment houses)

GRANIL'SHCHIKOV, V.A. inzhener; KUZNETSOV, I., inzhener.

Designing and building large-span reinforced concrete bridges in cities. Zhil.-kom. khoz. 6 no.6:25-27 '56. (MLRA 9:12)

(Bridges, Concrete)

GRANIL'SHCHIKOV, V.A., inzhener.

Modern reinforced-concrete long-span bridges abroad. Bet.i zhel.-bet. no.9:334-336 S '56. (MLRA 9:10)
(Bridges, Concrete)

3443. GRANILSHCHIKOV V. P. and PARKHOMENKO G. M. Moscow
Sanitary, hygienic, and technical aspects of planning and equipment of laboratories dealing with radioactive materials (Russian text) Med. Radiol. 1956, 1/3 (42–52)

When the total radioactivity involved does not exceed 100 mc., no complicated protective devices are, as a rule, necessary. If it exceeds 500 mc. they are of great importance. Trizonal organization of work in those cases was empirically found to be superior to other arrangements. Its essence is a division of the premises into 3 parts: 'clean' zone, the zone allotted to the equipment itself, and a 'dirty' zone. The entrances to 'clean' and 'dirty' zones are distinct and provided with special sanitary arrangements. A plan of one 3-storey building for such a laboratory is provided, as well as separate plans of specially protected units for work with α-, β- and γ-active isotopes, with the scheme of the distribution of these units and of the means of transport within such a laboratory. Arkaev – Moscow

GRANIL'SHCHIKOV, V.P., PARKHOMENKO, G.M.

Result of using a three-zone plan in work with radium. Gig. i san. 23 no.10:76-78 O '58 (MIRA 11:11)

(RADIATION PROTECTION,
hosp. zones in protection against radium (Rus))
(HOSPITALS,
zonal system in protection against radium (Rus))

GRANIL'SHCHIKOV, V.P.; PARKHOMENKO, G.M.

Planning of laboratories and radiation safety. Med. rad. 5 no.12: 47-56 '60. (MIRA 14:3)

(RADIATION PROTECTION)

CHERNAYA, A.P.; ROSHCHINA, K.N.; GRANIL'SHCHIKOVA, M.A.

Stimulation of labor activity. Akush.i gin. no.5:109 '61.
(MIRA 15:1)

1. Iz rodil'nogo doma (glavnyy vrach - zasluzhennyy vrach RSFSR Yu.V. Korchagin) Chetvertogo Glavnogo upravleniya (glavnyy akusher-ginekolog - prof. V.P. Mikhaylov) pri Ministerstve zdravookhraneniya SSSR.

(LABOR (OBSTETRICS))

GRANIN, A.V.

Treatment of pulpitis with biomycin in combination with a dionine. Stomatologiia 41 no.5:91 S-O '62. (MIRA 16:4)

1. Iz bol'nitsy No.2 (glavnyy vrach T.F.Voronina) g. Mariinska Kemerovskoy oblasti.
(GUMS--DISEASES) (AUREOMYCIN) (MORPHINE)

GRANIN, D., PARIISKIY, A.

Science - United States

Chroniclers of the electric chair ("A chronological history of electrical development from 600 B. C." Reviewed by D. Granin, A. Pariiskiy). Tekh. molod., no. 2, 1952.

Monthly List of Russian Accessions, Library of Congress, June 1952. UNCLASSIFIED.

GRANIN, GRANIN, Daniil; ZUBKOVA, T.D., red.; LEVONEVSKAYA, L.G., tekhn. red.

[Island of the young; stories about Cuba]Ostrov molodykh; rasskazy o Kube. Leningrad, Lenizdat, 1962. 100 p. (MIRA 15:12)

(Cuba—Description and travel)

GRANIN, Daniil; TKHORZHEVSKIY, S.S., red.; KOMM, V.G., tekhn. red.

[Unexpected morning]Neozhidannoe utro. Moskva, Izd-vo "Sovetskii pisatel'," 1962. 129 p. (MIRA 16:3)
(Cuba--Description and travel)

KURCHATOV, G.N.; GRANIN, G.I.

The Lena River steam navigation is one hundred years old.
Rech.transp. 15 no.8:1-3 Ag.'56. (MLRA 9:11)
(Lena River--Steam navigation)

GRANIN, M.

Seminar for club workers. Sov.profsoiuzy 3 no.9:55 S'55. (MLRA 8:12)

1. Zaveduyushchiy profkabinetom oblsovprofa, Chita
(Chita--Community centers)

GRANIN, M. (g.Chita)

A dormitory council with initiative. Sov.profsoiuzy 4 no.3:64-65 Mr '56. (MLRA 9:7)

1.Zaveduyushchiy prefkabinetom pri Chitinskom oblsovprofs.
(Chita--Community centers)

USSR / General and Special Zoology. Insects. P

Abs Jour: Ref Zhur-Biol., No 4, 1958, 16471

Author : Degtyareva A.S., Sanin V.A., Granin E.F.
Inst : Not given
Title : The Effectiveness of New Chlororganic Insecticides in the Control of the Beet Weevil. (Effectivnost' novykh khlororganicheskikh insekticidov v bor'be so sveklovichnym dolgonosikom.)

Orig Pub: Nauchn. tr. In-ta entomol. i fitopatol. AN UkSSR, 1956,7,5-20.

Abstract: Laboratory, small-plot experiments, and production studies demonstrated that chlorothane, chlorothane with DDT, chlorindane, and chlorophene were practically equal in effectiveness when sprayed on the young beet sprouts; they brought about death of the weevil beetles (80 - 100%) in eight days.

Card 1/3

USSR / General and Special Zoology. Insects. P

Abs Jour: Ref Zhur-Biol., No 4, 1958, 16471

Abstract: Chlorothane and chlorophene were somewhat more effective.. The emulsions of these preparations in above ground and aroplane spraying did not yield to DDT emulsion in the rapidity and duration of action and were greatly superior to HCCH emulsion in an equal outlay of the technical product on one hectare. Emulsions of polychlorpinane and polychlorcamphene (a dark method of chlorination) were also very effective and did not scorch the leaves. The new preparations were successful in hot and cool weather with frequent precipitation. An effective quantity of the outlay of all the new insecticides was 1 kg/hectare. A 3% concentration of the preparation in an outlay of 50 litres to a hectare of land was recommended for aeroplane spraying, and a 0.4% concen-

Card 2/3

Card 3/3

USSR / General and Special Zoology. Insects.

Abs Jour: Ref Zhur-Biol., No 4, 1958, 16467

Author : Orlacheva K.A., Granin E.F.
Inst : Institute of Entomology and Phytopathology of the Academy of Sciences of the Ukrainian SSR.
Title : Toxicological Evaluation of Various Insecticides in the Treatment of Seeds and Spraying of the Sugar-beet sprouts. (Toksikologicheskaya otsenka razlichnykh insecticidov pri obrabotke semyan i opryskivanii vakhodov sakharnoi svekly)

Orig Pub: Nauchn. tr. In-ta entomol. i fytopatol. AN Ukssr. 1956,7,46-57

Abstract: The best sprouts from seeds treated with [hexa-chlorane] HCCH enriched with y-isomer developed well and were highly resistant to damage by beet weevils. An outlay of more than 0.2 kg/c

Card 1/2

28

GRANIN, Ye. F.

USSR / General and Specialized Zoology. Insects. Insect and Mite Pests. P

Abs Jour : Ref Zhur - Biol., No 10, 1958, No 44846

Authors : Gar, K. A.; Granin, Ye. F.
Inst : Not given
Title : The Testing of New Preparations for Presowing Treatment of Sugar-Beet Seeds.

Orig Pub : Zashchita rast. ot vredit. i bolezney, 1957, No. 1, 46.

Abstract : Chlordane, heptachlor, aldrin, dieldrin, isodrine and endrine were tested in experiments on small plots. Ethalone - HCCH (technical and enriched with gamma-isomer to 99-100 percent). The effectiveness was determined at various periods (up to 9 days) after sprouts appeared in glass containers on the plots The dead beetles were counted 1 1/2 and 3 days after adding them to the plant containers. All the insecticides tested led

Card 1/2

MEL'NIKOV, N.N.; VOL'FSON, L.G.; KUZNETSOVA, K.V.; SAPOZHKOV, Yu.N.; GAR, K.A.; GRANIN, Ye.F.; FARBER, M.S.

Insecticides based on hexachlorocyclopentadiene. [Trudy] NIUIF no.164:8-11 '59. (MIRA 15:5)

(Cyclopentadiene)

GRANIN, Ye. F., Cand Agric Sci (diss) -- "A study of the toxicity, stability, and effectiveness of a series of organic-halide insecticides". Moscow, 1960. 25 pp (State Committee of the Council of Ministers USSR on Chem, Sci Inst of Fertilizers and Insectofungicides im Prof Ye. V. Samoylov), 200 copies (KL, No 15, 1960, 138)

KRYUKOV, G. P.; NIKIFOROV, A. M.; PETRUSHOVA, N. I., starshiy nauchnyy sotrudnik; GRANIN, Ye. F., nauchnyy sotrudnik

Questions and answers. Zashch. rast. ot vred. i bol. 6 no.6: 39-40 Je '61. (MIRA 16:4)

1. Zaveduyushchiy otdelom okhrany truda TSentral'nogo komiteta professional'nogo soyuza rabochikh i slushashchikh sel'skogo khozyaystva i zagotovok (for Kryukov). 2. Nikitskiy botanicheskiy sad, Yalta (for Petrushova). 3. Nauchno-issledovatel'skiy institut po udobreniyam i insektofungisidam imeni Samoylova (for Granin).

(Plants, Protection of)

MEL'NIKOV, N.N.; VOLODKOVICH, S.D.; VOL'FSON, L.G.; GRANIN, Ye.F.

Production and insecticide properties of octachloroendomethylenetetrahydrophthalan. Zhur. prikl. khim. 34 no. 12:2716-2722 D '61. (MIRA 15:1)

1. Nauchnyy institut po udobreniyam i insektofungisidam imeni professora Samoylova.

(Phthalan)

GRANIN, Ye.F.

Effectiveness of the emulsion of heptachlor and polychloropinene against beet weevils. [Trudy] NIUIF no.171:70-73 '61. (MIRA 15:7)

(Beet pests) (Heptachlor) (Pinene)

GRANIN, Ye.F., kand.sel'skokhozyaystvennykh nauk

Chlorine organic insecticides (to be continued). Zashch. rast. ot vred. i bol. 7 no.1:43-44 '62. (MIRA 15:6)
(Chlorine organic compounds)
(Insecticides)

GRANIN, Ye.F.

Chlorine organic insecticides (to be continued). Zashch. rast. ot vred. i bol. 7 no.3:44-45 Mr '62. (MIRA 15:11)
(DDT (Insecticide))

GRANIN, Ye.F.

Chlorine organic insecticides (continuation). Zashch.rast.ot vred. i bol. 7 no.6:41-42 Je '62. (MIRA 15:12)
(CHLORINE ORGANIC COMPOUNDS) (INSECTICIDES)

GRANIN, Ye.F., kand.sel'skokhoz.nauk

Chlorine organic insecticides (continuation). Zashch. rast. ot vred. i bol. 7 no.7:43-44 Jl '62. (MIRA 15:11)
(Insecticides)
(Chlorine organic compounds)

[illegible]

[illegible]

[illegible] 54

[illegible]

[illegible]

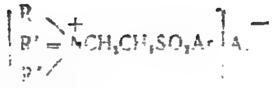

$$\left[\begin{matrix}R\\R'\\R''\end{matrix}>\overset{+}{N}CH_2CH_2SO_2Ar\right]A^{-}$$

NO REF SOV: 000 OTHER: 000

L 20978-66 EWT(1)/T RO/JK

ACCESSION NR: AP5019085 UR/0286/65/000/012/0110/0110

AUTHORS: Granin, Ye. F.; Fadeyev, Yu. N.; Zhil'tsova, G. I.; Bliznyuk, N. K.; Kolomiyets, A. F.; Golubeva, R. N.

TITLE: A method for controlling fungous diseases of plants. Class 45, No. 172153

SOURCE: Byulleten' izobreteniy i tovarnykh znakov, no. 12, 1965, 110

TOPIC TAGS: agriculture, pesticide, fungicide, disease control, plant culture

ABSTRACT: This Author Certificate presents a method for controlling fungous diseases of plants by treating the latter with fungicides. To broaden the assortment of fungicides, derivatives of β-phosphorylethanesulfoacid are used as fungicides. These compounds follow the general formula

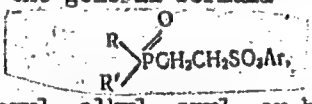

where R and R' are alkoxyl, aroxyl, alkyl, aryl, or hydroxyl, and Ar is a nonreplaced or replaced aryl.

ASSOCIATION: none

Card 1/2

L 20976-66

ACCESSION NR: AP5019085

SUBMITTED: 01Jul64 ENCL: 00 SUB CODE: LS

NO REF SOV: 000 OTHER: 000

Card 2/2 mgs

ZEMLYANSKIY, V.A., kand. tekhn. nauk, dotsent; GRIN, Yu.P., aspirant

Deformation of the cut-off layer in cutting metals with round self-rotating cutting tools. Izv. vys. ucheb. zav.; mashinostr. no.3:151-157 '64. (MIRA 17:7)

1. Khar'kovskiy aviatsionnyy institut.

L 44161-65 EWP(k)/EWP(z)/EWA(c)/EWT(d)/EWT(m)/EWP(h)/EWP(b)/EWA(d)/EWP(v)/
[illegible]-4 MJW/JD/HW

[illegible]: AP5003834

[illegible]: Demlyanskiy, [illegible] A. (Docent); [illegible]

TITLE: Dynamic investigations of round rotary cutters

SOURCE: IVUZ. Mashinostroyeniye, no. 1, 1965, 180-185

TOPIC TAGS: cutting tool, cutting force / ShKh15 steel, R18 steel

[illegible] To continue previous work of the authors, the effects of operating [illegible] cutting forces of rotary cutter [illegible] investigated.

[illegible]

the enclosure, can be written as

[illegible]

[illegible] measurements of cutting forces [illegible] steel [illegible] with [illegible] diameter R18 steel cutter [illegible] as [illegible] increased from 30-60°, P_z [illegible]

L 44161-65

ACCESSION NR: AP5008834

increased by 49% (from 70 kg) and P_y remained constant (at 90 kg). Changing the cutting speed from 15-85 m/min ($\lambda = 50^\circ$, S = 0.[illegible] mm/rev, t = 0.4 mm) gave [illegible] P_x, [illegible], and P_y at ≈ 40 m/min, and they decreased to ≈ 100, 85, and [illegible] respectively at 85 m/min. The effects of changing the feed from 0.11-0.87 mm/rev ($\lambda = 50^\circ$, t = 0.4, v = 42.5) and the depth of cut from 0.10-0.85 mm ([illegible] mm/rev, v = 54 m/min) were to increase the cutting forces ($\approx 40\%$ when doubling the feed and 67% when doubling the depth of cut). Changing the tool frontal angle γ had the same effect as on other types of tools but less pro-[illegible]. Between $\gamma = +5^\circ$ and $+20^\circ$, P_x and P_y remained [illegible] constant. It was also found that lubrication with oil and MoS_2 oil [illegible] decrease the cutting forces but only displaced the maxima from v = 40 m/min to 65-70 m/min. Correlation of the experimental P_x/P_z according to the above equation was accurate to within +0.5 and -2.5° (+1.5° average). Orig. art. has: 8 figures and 2 formulas.

ASSOCIATION: none

SUBMITTED: 13Mar63 ENCL: 01 SUB CODE: IE

NO REF SOV: 006 OTHER: 000

Card 2/3